FF-2016-3

The FF-2016-3 is a 28 VDC, 3A power filter with an auxiliary input to power passive loads.

The primary filter circuit (#1) is intended to filter a DC / DC converter with the objective to meet the requirements of MIL-STD-461D, E or F. Circuit (#2) provides filtering for higher frequencies and is intended to filter an input to a passive load and to eliminate any high frequency path around the primary filter.

The filter package utilizes "Feed-Thru Capacitor" construction which extends its' frequency performance to beyond 1.0Ghz. The filter case is environmentally sealed and is designed to handle the shock and vibration of wheeled vehicle and aircraft installations.

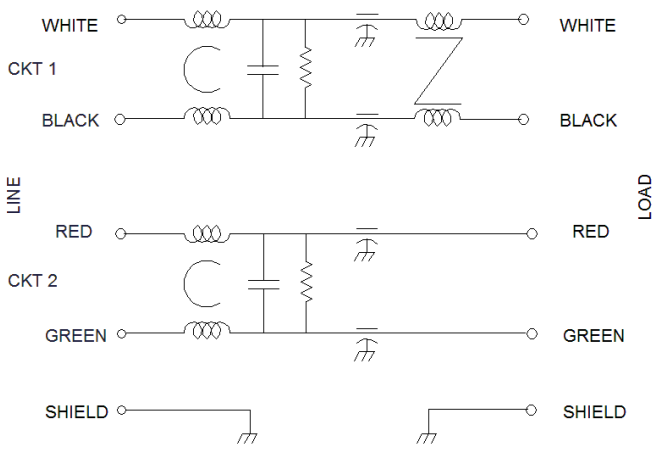

Operating Voltage = _____ 28 VDC
Max. Input Voltage = _____135 VDC
Max. Operating Current: CKT-1 = _____3.0 A
CKT-2 = _____10.0 A

Diel, Withstand line—Case = _____ 1500 Vdc for 1 min

Temperature Range (Storage) = _____-40 to 100℃
Temperature Range (Operating) = _____ -40 to 85℃

Cable Insulation: Teflon
Enclosure Finish: Electro-Nickel

Calculated MTBF = _____ 1,838,752 Hrs @ 30℃ GB

INSERTION LOSS vs. FREQUENCY

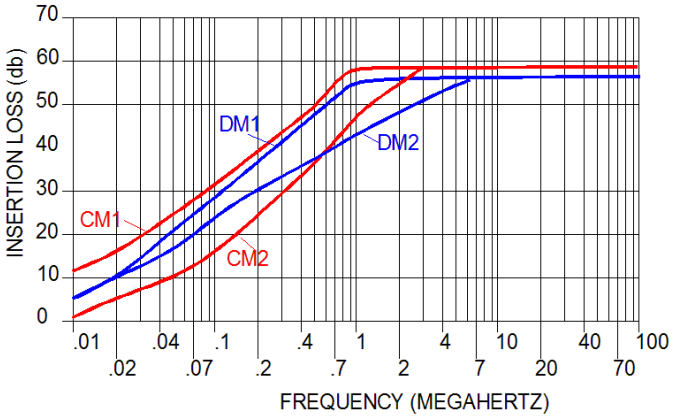

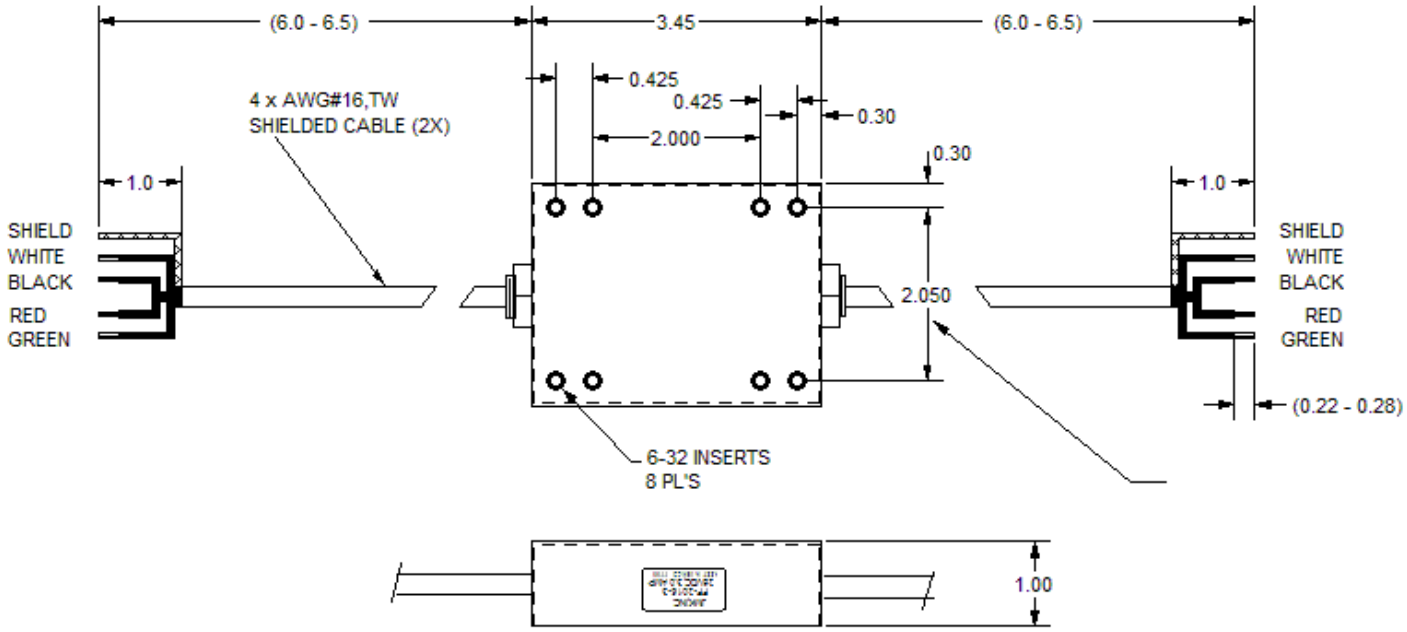

USA JMK Inc 15 Caldwell Dr. Amherst, NH 03031 PH: 603 886-4100 FX: 603 886-4115
email: info@jmkfilters.com
EUR JMK Inc Glasgow G13 1DN Scotland UK PH: 44-(0) 7785310729 Fax: 44-(0) 141 589 1884