FF-0440-3, 6, 8, 10

This filter series is available with current ratings of 3,6,8, and 10 amps. It is also produced with configurations featuring 1/4 tab terminals, AWG #18 leads, or with an IEC inlet connector.

The design is intended for systems which have requirements to meet the following:

- FCC
- EN55022 or other European requirements
- MIL-STD-461D or E.

Order P/N: FF-0440-3
FF-0440-6
FF-0440-8
FF-0440-10

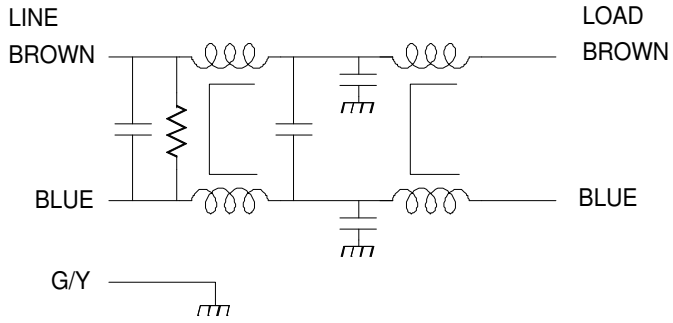

Operating Voltage = _____ 115/250 V
Operating Current = _____3,6,8,10 Amps
Operating Frequency = _____50 / 60 Hz

Temperature Range = _____-20 to 50℃

Diel. Withstand (L-CASE) = _____ 1500 V; 1 Min
Diel. Withstand (L-L) = _____ 1500 Vdc; 1 Min

Leakage Current = _____0.5 mA @ 250 V, 60 Hz
Discharge Volt after 1.0 sec = _____ 10 V Max

Calculated MTBF = _____4,640,694 Hrs @ 30℃ GB

INSERTION LOSS vs. FREQUENCY

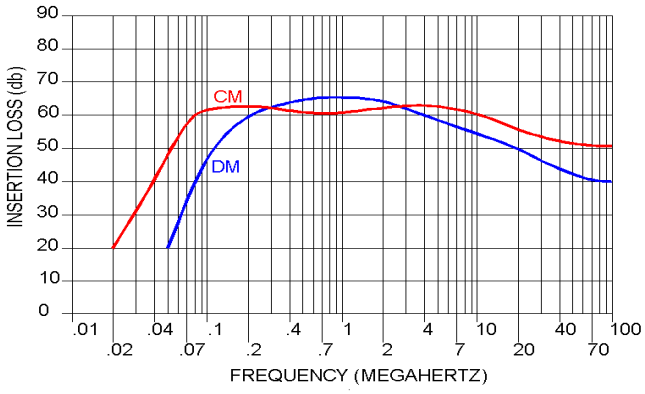

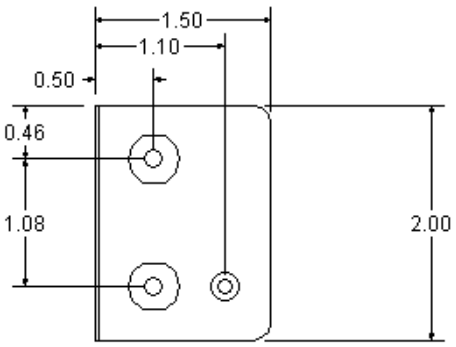

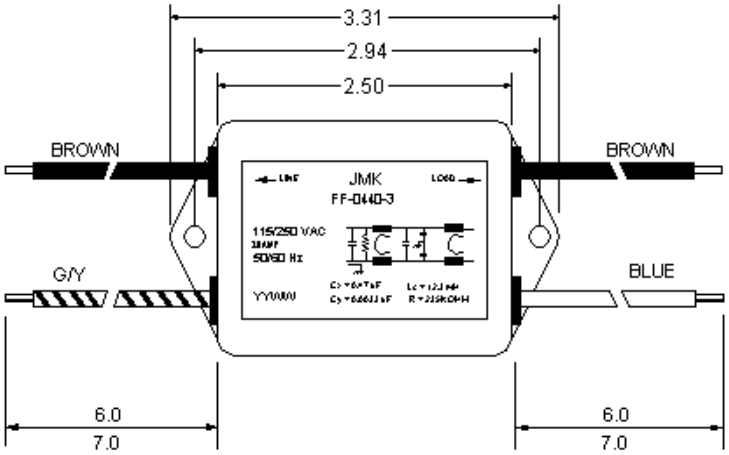

USA JMK Inc 15 Caldwell Dr. Amherst, NH 03031 PH: 603 886-4100 FX: 603 886-4115
email: info@jmkfilters.com
EUR JMK Inc Glasgow G13 1DN Scotland UK PH: 44-(0) 7785310729 Fax: 44-(0) 141 589 1884